PNEUMATIC ACTUATOR · 0–90°

AT301U

Double acting & spring return pneumatic actuator

AT301U-DM

Quarter-turn pneumatic actuator for 0–90° valve automation, available double acting (D) or spring return with spring sets S 05 to S 12.

- Double acting or spring return (S 05 – S 12)
- ISO 5211 F07 + F10 standard flange
- Optional flanges: F05 + F07 · F07
- Air ports 2 and 4 · G1/4"
- ST, HT and LLT temperature versions

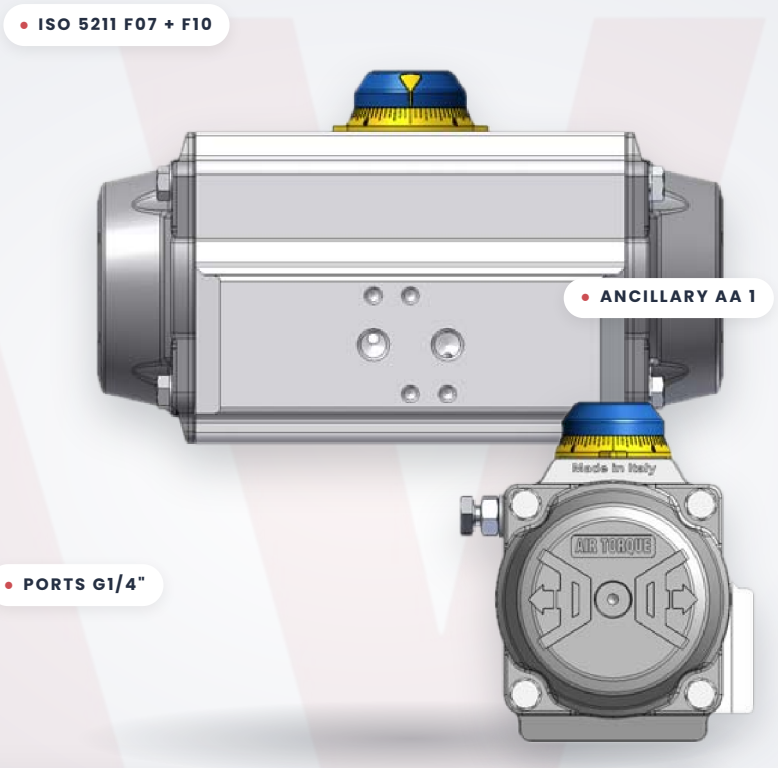

213 Nm	8 bar	F07/F10	5.15 kg
DA TORQUE @ 8 BAR	MAX. PRESSURE	STD ISO 5211 FLANGE	APPROX. WEIGHT (DA)

Double acting output torque.

NM · 0° AND 90°

Pressure (bar)	2.5	3	3.5	4	4.2	4.5	5	5.5	6	7	8
Torque (Nm)	**66.5**	**79.8**	**93.1**	**106**	**112**	**120**	**133**	**146**	**160**	**186**	**213**

Stroke

Rotation & travel adjustment

Rotation (std)	**0° – 90°**
Max. stroke	**-5° to +95°**
Adjustable	**-5...+15° / +75...+95°**
Screw adjustment	**1° per 1/6 turn**

Air & timing

Chamber Ø 100 mm · max. 8 bar

Air volume (open/close)	**0.71 / 1.11 L**
Moving time D (open/close)	**0.50 / 0.60 s**
Moving time S (open/close)	**0.70 / 0.90 s**
Ancillary attachment	**AA 1**

Temperature

Operating range options (°C)

ST (standard)	**-40 to +80**
HT (high temp.)	**-15 to +150**
LLT (extreme low)	**-55 to +80**
Max. pressure	**8 bar**

SPRING RETURN SETS S 05 · S 06 · S 07 · S 08 · S 09 · S 10 · S 11 · S 12 Full torque table overleaf

Moving times measured under the test conditions listed overleaf. Every temperature range option requires proper components and lubricant – see Air Torque technical data sheet T.D.S. U00501E.

SUPPLIED & SUPPORTED IN THE UK BY
Actuation Valve & Control Ltd
actuation.co.uk

DIMENSIONS & MOUNTING

AT301U D/S – 90° dimensions in mm.

ISO 5211 flange options, drive square details and spring return output torque for every spring set from S 05 to S 12.

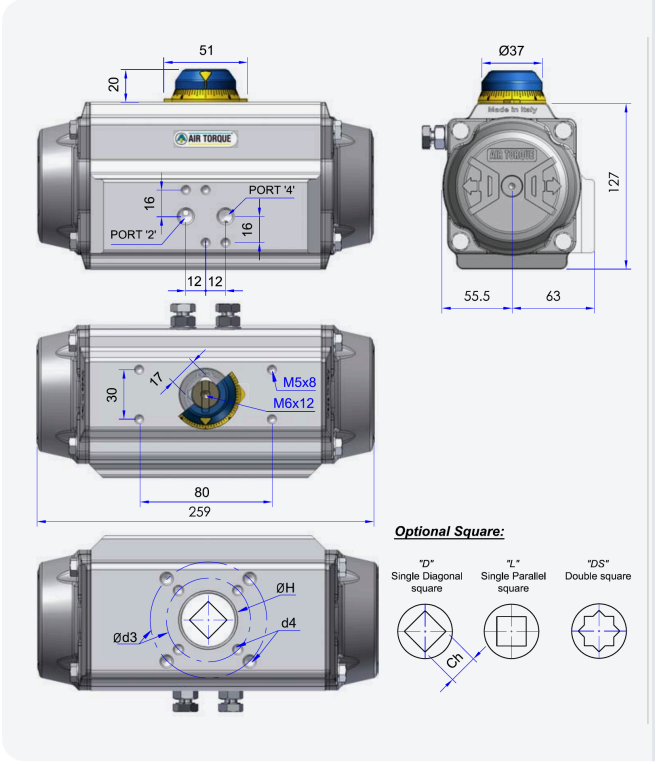

ISO 5211 FLANGE DIMENSIONS

	STANDARD		OPTIONAL		
ISO 5211	**F07 + F10**		**F05 + F07**		**F07**
Ø d2	55	NA	NA		55
d3	70	102	50	70	70
Ø d4	M8x12	M10x15	M6x9	M8x12	M8x12
Ø H	55		NA		55
Ch x l min. S	14x19 - 17x19				
Ch x l min. DS	17x25 - 22x25				
h min.	1.5	1.5	1.5	1.5	1.5
h1	2	NA	NA		2

Spigot (Ø d2 / h1): only on request. NA = not available.

CONNECTION / ATTACHMENT

Pressure connection: port 2 and 4	**G1/4"**
Ancillary attachment	**AA 1**

OPTIONAL SQUARE

"D" single diagonal square · **"L"** single parallel square · **"DS"** double square

Spring return output torque.

NM · START / END OF STROKE

Spring set	2.5 bar		3 bar		3.5 bar		4 bar		4.2 bar		4.5 bar		5 bar		5.5 bar		6 bar		7 bar		8 bar		Spring stroke		Approx. weight (kg)
	0°	90°	0°	90°	0°	90°	0°	90°	0°	90°	0°	90°	0°	90°	0°	90°	0°	90°	0°	90°	0°	90°	90°	0°	
	Start	End	Start	End	Start	End	Start	End	Start	End	Start	End	Start	End	Start	End	Start	End	Start	End	Start	End	Start	End	
S 05	41.1	27.1	54.4	40.4	67.7	53.7	81	67	86.3	72.3	94.3	80.3	108	93.6									**39.4**	**25.3**	**5.50**
S 06	36.1	19.2	49.4	32.5	62.7	45.8	76	59.1	81.3	64.4	89.3	72.4	103	85.7	116	99							**47.3**	**30.4**	**5.57**
S 07			44.3	24.6	57.6	37.9	70.9	51.2	76.2	56.5	84.2	64.5	97.5	77.8	111	91.1	124	104					**55.1**	**35.5**	**5.64**
S 08					52.5	30	65.8	43.3	71.1	48.7	79.1	56.6	92.4	69.9	106	83.2	119	96.5	146	123			**63**	**40.5**	**5.71**
S 09							60.8	35.5	66	40.8	74	48.8	87.3	62.1	101	75.3	114	88.6	141	115	167	142	**70.9**	**45.6**	**5.78**
S 10											69	40.9	82.3	54.2	95.6	67.5	109	80.8	135	107	162	134	**78.8**	**50.7**	**5.85**
S 11													77.2	46.3	90.5	59.6	104	72.9	130	99.5	157	126	**86.7**	**55.7**	**5.92**
S 12															85.4	51.7	98.7	65	125	91.6	152	118	**94.5**	**60.8**	**5.99**

MOVING TIME TEST CONDITIONS

(1) Room temperature, (2) actuator stroke 90°, (3) solenoid valve with orifice of 4 mm and a flow capacity Qn 400 L/min, (4) inside pipe diameter 8 mm, (5) medium clean air, (6) air supply pressure 5.5 bar (79.75 psi), (7) actuator without external resistance load. When one or more of these parameters differ in the field, the moving time will be different.

OPERATING MEDIUM

The operating medium must be free of dust and oil. Maximum particle size must not exceed 30 µm (ISO 8573 Part 1, Class 5). To prevent water condensation and/or solidification (ice when the actuator works below 0 °C), the operating medium must have a dew point of -20 °C or at least 10 °C below the ambient temperature (ISO 8573 Part 1, Class 3).

Data supplied by Air Torque and provided for reference only. Specifications may change without notice – please confirm details with Actuation Valve & Control before ordering.

AV®

Sizing an Air Torque actuator?

Talk to our UK team about torque sizing, mounting kits and complete actuated valve packages.

actuation.co.uk